Corner Basin Arc

Designer: Robin Levien

Description
Connect Arc corner lavatory 480 x 440 mm with one taphole.

Necessary equipment
Fixation set.

Product	Article-No.
Arc corner lavatory 480 x 440 mm	**E792801**
Necessary equipment	
Fixation set	**K710767**
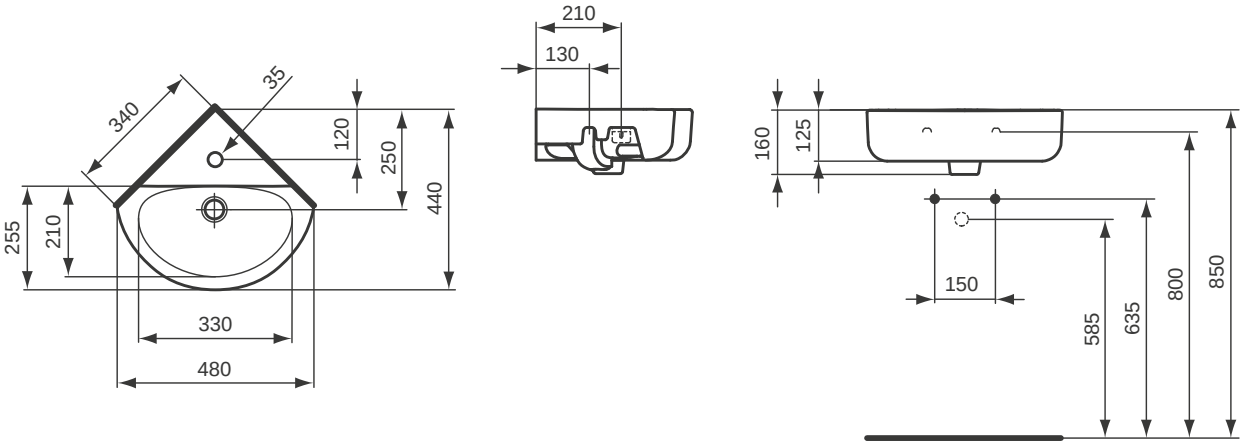
Finishes
01 White